Burnside Road West @ Interurban Road

Wednesday, October 23, 2019

The data presented here is for information purposes only and should not be considered authoritative for construction, geotechnical, engineering, navigational, legal, or other site-specific uses. The information shared is owned by the Transportation Division of the Engineering Department at the District of Saanich. Accuracy is not guaranteed.

Vehicle Turning Movement Survey
With Classification

Major Route: Burnside Road West
Minor Route: Interurban Road
Municipality: Saanich
Filename: Burnside Road West @ Interurban Rd-Oct 23, 2019.xlsx
Location #: TIN001161
Count ID: 2019028
Date: October 23, 2019
Day-of-week: Wednesday

East/West Route: Burnside Road West
Intersection Type: 3-leg west approach
Signalized?: No
Weather: Overcast and dry

Vehicle Classifications: Vehicles and Peds
Bikes

This data is for Vehicles and Peds

Shift	Start	End	Duration
AM	7:30	9:30	2.00
MD			
PM	15:30	18:30	3.00
Total	**7:30**	**18:30**	**5.00**

Notes: 24-hour clock used for reporting (15-minute increments)
North Approach - southbound vehicles approaching intersection from the north
15x4 - 15 min volume (from maximum 15 minute period of movement/approach in peak hour period [*]) x 4
Pedestrians - N indicates pedestrians crossing north approach (east/west)

Comments:

Survey Data
Vehicles and Peds

Burnside Road West @ Interurban Road
Wednesday, October 23, 2019

Time	Interurban Rd				Interurban Rd				Burnside Road West														
Period	NORTH Approach				SOUTH Approach				WEST Approach				EAST Approach				Total Volume		Peak	Crosswalks			
Begins	Left	Thru	Right	Total	Left	Thru	Right	Total	Left	Thru	Right	Total	Left	Thru	Right	Total	15-min	Hour		N	S	W	E
7:30		163	13	**176**	40	119		**159**	2		79	**81**					**416**			4	0	3	
7:45		159	9	**168**	47	115		**162**	1		85	**86**					**416**			6	0	5	
8:00		126	2	**128**	61	131		**192**	3		90	**93**					**413**		*	13	0	9	
8:15		145	10	**155**	74	115		**189**	1		61	**62**					**406**	1651	*	26	0	15	
8:30		158	5	**163**	74	102		**176**	1		85	**86**					**425**	1660	+	6	0	5	
8:45		184	7	**191**	45	94		**139**	3		85	**88**					**418**	1662	*	3	0	0	
9:00		109	6	**115**	38	71		**109**	1		64	**65**					**289**	1538		3	0	3	
9:15		88	2	**90**	43	67		**110**	1		57	**58**					**258**	1390		1	0	1	
n/a																							
n/a																							
n/a																							
n/a																							
n/a																							
n/a																							
n/a																							
n/a																							
n/a																							
n/a																							
n/a																							
Total		1132	54	**1186**	422	814		**1236**	13		606	**619**					**3041**			62	0	41	
n/a																							
n/a																							
n/a																							
n/a																							
n/a																							
n/a																							
n/a																							
n/a																							
n/a																							
n/a																							
n/a																							
n/a																							
n/a																							
n/a																							
n/a																							
n/a																							
n/a																							
n/a																							
n/a																							
Total																							
15:30		102	7	**109**	135	242		**377**	4		36	**40**					**526**			7	0	6	
15:45		92	9	**101**	109	257		**366**	2		35	**37**					**504**			4	0	5	
16:00		112	5	**117**	106	214		**320**	1		39	**40**					**477**			3	0	2	
16:15		113	5	**118**	133	259		**392**	1		30	**31**					**541**	2048	*	1	0	1	
16:30		117	2	**119**	137	275		**412**	0		43	**43**					**574**	2096	*	5	0	5	
16:45		129	8	**137**	141	301		**442**	1		28	**29**					**608**	2200	+	5	0	3	
17:00		128	7	**135**	112	265		**377**	1		35	**36**					**548**	2271	*	1	0	2	
17:15		122	6	**128**	122	234		**356**	0		31	**31**					**515**	2245		0	0	1	
17:30		111	1	**112**	91	202		**293**	1		23	**24**					**429**	2100		3	0	4	
17:45		136	2	**138**	98	162		**260**	1		29	**30**					**428**	1920		0	0	0	
18:00		114	4	**118**	87	187		**274**	2		36	**38**					**430**	1802		5	0	4	
18:15		109	7	**116**	97	130		**227**	0		34	**34**					**377**	1664		1	0	1	
n/a																							
n/a																							
n/a																							
n/a																							
n/a																							
n/a																							
n/a																							
n/a																							
Total		1385	63	**1448**	1368	2728		**4096**	14		399	**413**					**5957**			35	0	34	

AM Peak Period
Vehicles and Peds

Burnside Road West @ Interurban Road
Wednesday, October 23, 2019

Time Period Begins	Interurban Rd NORTH Approach				Interurban Rd SOUTH Approach				Burnside Road West WEST Approach				EAST Approach				Total Volume		Peak	Crosswalks				Conflict	
	Left	Thru	Right	Total	Left	Thru	Right	Total	Left	Thru	Right	Total	Left	Thru	Right	Total	15-min	Hour		N	S	W	E	15 min	Hr
7:30		163	13	176	40	119		159	2		79	81					416			4	0	3		295	
7:45		159	9	168	47	115		162	1		85	86					416			6	0	5		300	
8:00		126	2	128	61	131		192	3		90	93					413		*	13	0	9		279	
8:15		145	10	155	74	115		189	1		61	62					406	1651	*	26	0	15		290	1164
8:30		158	5	163	74	102		176	1		85	86					425	1660	+	6	0	5		322	1191
8:45		184	7	191	45	94		139	3		85	88					418	1662	*	3	0	0		321	1212
9:00		109	6	115	38	71		109	1		64	65					289	1538		3	0	3		217	1150
9:15		88	2	90	43	67		110	1		57	58					258	1390		1	0	1		190	1050
n/a																									
n/a																									
n/a																									
n/a																									
n/a																									
n/a																									
n/a																									
n/a																									
n/a																									
n/a																									
n/a																									
Total		1132	54	**1186**	422	814		**1236**	13		606	**619**					3041			62	0	41			2214
Avg Hr		566	27	**593**	211	407		**618**	7		303	**310**					1521			31	0	21			

Peak hour of the intersection

Pk Hr		613	24	637	254	442		696	8		321	329					1662	*		48	0	29			1212
15x4		736	40	764	296	524		768	12		360	372					1700	+		104	0	60			1432
PHF		0.83	0.60	**0.83**	0.86	0.84		**0.91**	0.67		0.89	**0.88**					0.98			0.46	n/a	0.48			0.85

Peak hour of conflicting volumes for the intersection

Pk Hr		613	24	637	254	442		696	8		321	329					1662	*		48	0	29			1212
15x4		736	40	764	296	524		768	12		360	372					1700	+		104	0	60			1432
PHF		0.83	0.60	**0.83**	0.86	0.84		**0.91**	0.67		0.89	**0.88**					0.98			0.46	n/a	0.48			0.85

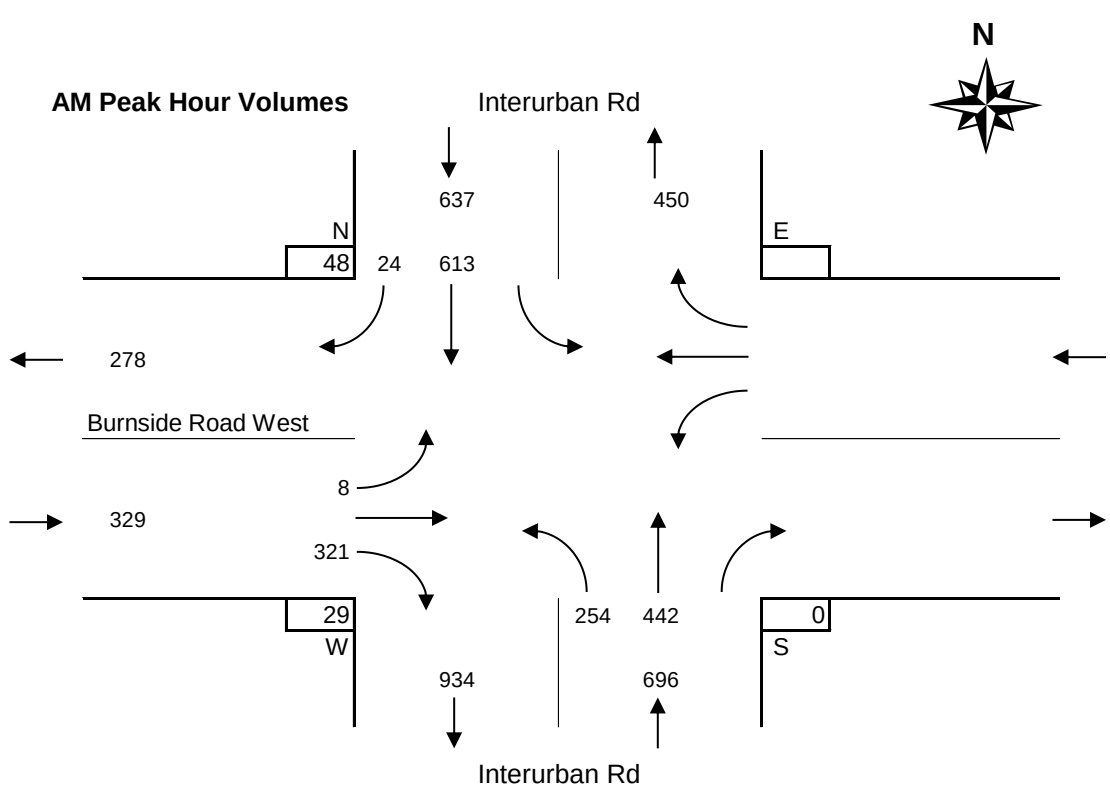

MD Peak Period
Vehicles and Peds

Burnside Road West @ Interurban Road
Wednesday, October 23, 2019

Time Period Begins	Interurban Rd NORTH Approach				Interurban Rd SOUTH Approach				Burnside Road West WEST Approach				EAST Approach				Total Volume		Peak	Crosswalks				Conflict	
	Left	Thru	Right	Total	Left	Thru	Right	Total	Left	Thru	Right	Total	Left	Thru	Right	Total	15-min	Hour		N	S	W	E	15 min	Hr
n/a																									
n/a																									
n/a																									
n/a																									
n/a																									
n/a																									
n/a																									
n/a																									
n/a																									
n/a																									
n/a																									
n/a																									
n/a																									
n/a																									
n/a																									
n/a																									
Total																									
Avg Hr																									

Peak hour of the intersection

Pk Hr																		*							
15x4																		+							
PHF																									

Peak hour of conflicting volumes for the intersection

Pk Hr																		*							
15x4																		+							
PHF																									

MD Peak Hour Volumes

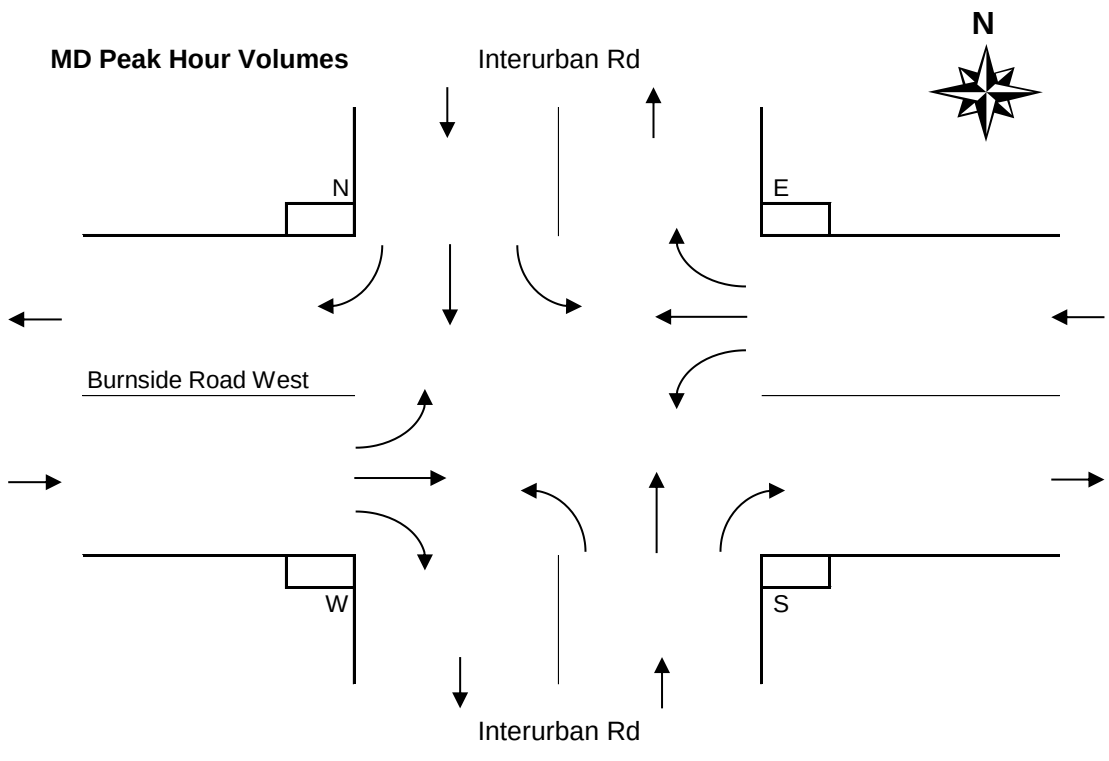

PM Peak Period
Vehicles and Peds

Burnside Road West @ Interurban Road
Wednesday, October 23, 2019

Time Period Begins	Interurban Rd NORTH Approach				Interurban Rd SOUTH Approach				Burnside Road West WEST Approach				EAST Approach				Total Volume		Peak	Crosswalks				Conflict	
	Left	Thru	Right	Total	Left	Thru	Right	Total	Left	Thru	Right	Total	Left	Thru	Right	Total	15-min	Hour		N	S	W	E	15 min	Hr
15:30		102	7	109	135	242		377	4		36	40					526			7	0	6		280	
15:45		92	9	101	109	257		366	2		35	37					504			4	0	5		292	
16:00		112	5	117	106	214		320	1		39	40					477			3	0	2		262	
16:15		113	5	118	133	259		392	1		30	31					541	2048	*	1	0	1		289	1123
16:30		117	2	119	137	275		412	0		43	43					574	2096	*	5	0	5		318	1161
16:45		129	8	137	141	301		442	1		28	29					608	2200	+	5	0	3		329	1198
17:00		128	7	135	112	265		377	1		35	36					548	2271	*	1	0	2		300	1236
17:15		122	6	128	122	234		356	0		31	31					515	2245		0	0	1		281	1228
17:30		111	1	112	91	202		293	1		23	24					429	2100		3	0	4		226	1136
17:45		136	2	138	98	162		260	1		29	30					428	1920		0	0	0		265	1072
18:00		114	4	118	87	187		274	2		36	38					430	1802		5	0	4		241	1013
18:15		109	7	116	97	130		227	0		34	34					377	1664		1	0	1		247	979
n/a																									
n/a																									
n/a																									
n/a																									
n/a																									
n/a																									
n/a																									
n/a																									
Total		1385	63	**1448**	1368	2728		**4096**	14		399	**413**					5957			35	0	34			3215
Avg Hr		462	21	**483**	456	909		**1365**	5		133	**138**					1986			12	0	11			

Peak hour of the intersection

Pk Hr		487	22	509	523	1100		1623	3		136	139					2271	*		12	0	11			1236
15x4		516	32	548	564	1204		1768	4		172	172					2432	+		20	0	20			1376
PHF		0.94	0.69	**0.93**	0.93	0.91		**0.92**	0.75		0.79	**0.81**					0.93			0.60	n/a	0.55			0.90

Peak hour of conflicting volumes for the intersection

Pk Hr		487	22	509	523	1100		1623	3		136	139					2271	*		12	0	11			1236
15x4		516	32	548	564	1204		1768	4		172	172					2432	+		20	0	20			1376
PHF		0.94	0.69	**0.93**	0.93	0.91		**0.92**	0.75		0.79	**0.81**					0.93			0.60	n/a	0.55			0.90

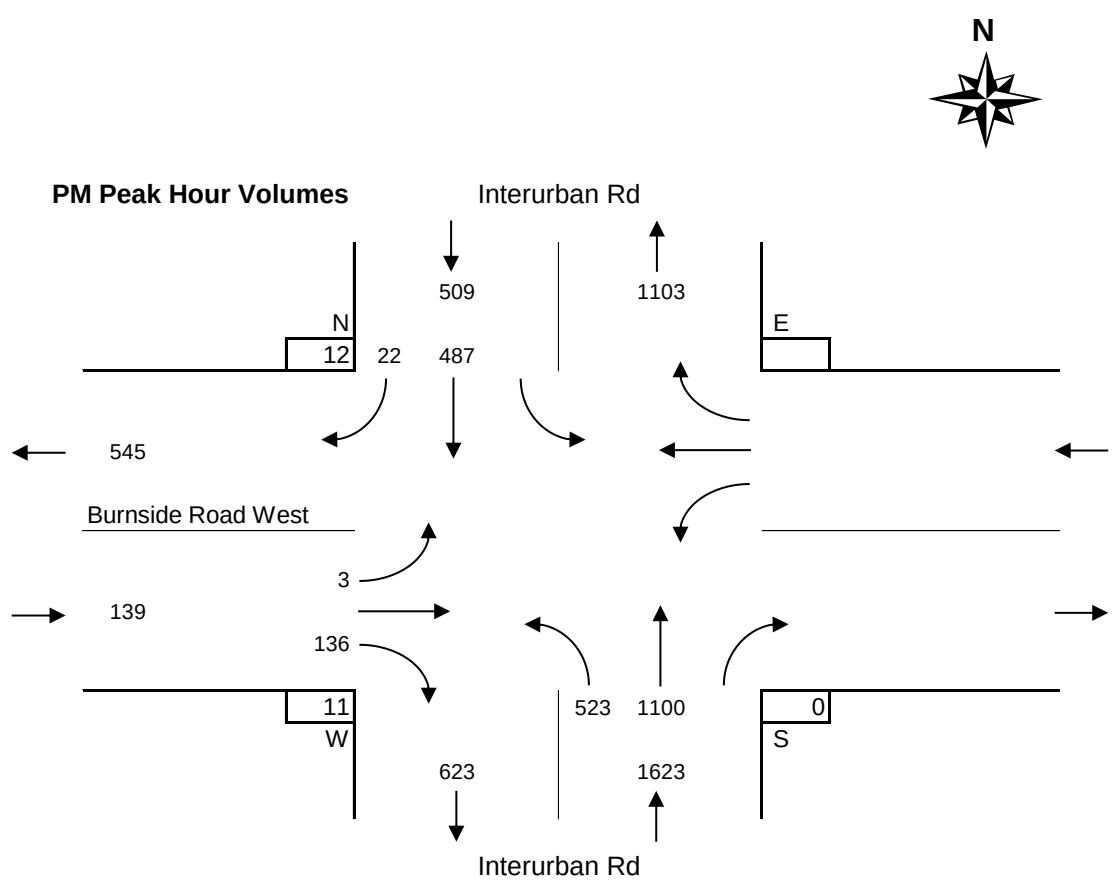

Period Hourly Averages
Vehicles and Peds

Burnside Road West @ Interurban Road
Wednesday, October 23, 2019

Entire Survey Period

5 Hours

	Interurban Rd				Interurban Rd				Burnside Road West								Total	Crosswalks			
	NORTH Approach				SOUTH Approach				WEST Approach				EAST Approach				Volume				
	Left	Thru	Right	Total	Left	Thru	Right	Total	Left	Thru	Right	Total	Left	Thru	Right	Total		N	S	W	E
Total		2517	117	**2634**	1790	3542		**5332**	27		1005	**1032**					8998	97	0	75	
Avg Hr		503	23	**527**	358	708		**1066**	5		201	**206**					1800	19	0	15	

AM Peak Period

2 Hours

	Interurban Rd				Interurban Rd				Burnside Road West								Total	Crosswalks			
	NORTH Approach				SOUTH Approach				WEST Approach				EAST Approach								
Totals	Left	Thru	Right	Total	Left	Thru	Right	Total	Left	Thru	Right	Total	Left	Thru	Right	Total	Volume	N	S	W	E
Period		1132	54	**1186**	422	814		**1236**	13		606	**619**					3041	62	0	41	
Avg Hr		566	27	**593**	211	407		**618**	7		303	**310**					1521	31	0	21	

MD Peak Period

Hours

	Interurban Rd				Interurban Rd				Burnside Road West								Total	Crosswalks			
	NORTH Approach				SOUTH Approach				WEST Approach				EAST Approach								
Totals	Left	Thru	Right	Total	Left	Thru	Right	Total	Left	Thru	Right	Total	Left	Thru	Right	Total	Volume	N	S	W	E
Total																					
Avg Hr																					

PM Peak Period

3 Hours

	Interurban Rd				Interurban Rd				Burnside Road West								Total	Crosswalks			
	NORTH Approach				SOUTH Approach				WEST Approach				EAST Approach								
Totals	Left	Thru	Right	Total	Left	Thru	Right	Total	Left	Thru	Right	Total	Left	Thru	Right	Total	Volume	N	S	W	E
Total		1385	63	**1448**	1368	2728		**4096**	14		399	**413**					5957	35	0	34	
Avg Hr		462	21	**483**	456	909		**1365**	5		133	**138**					1986	12	0	11	

Average Hour Volumes

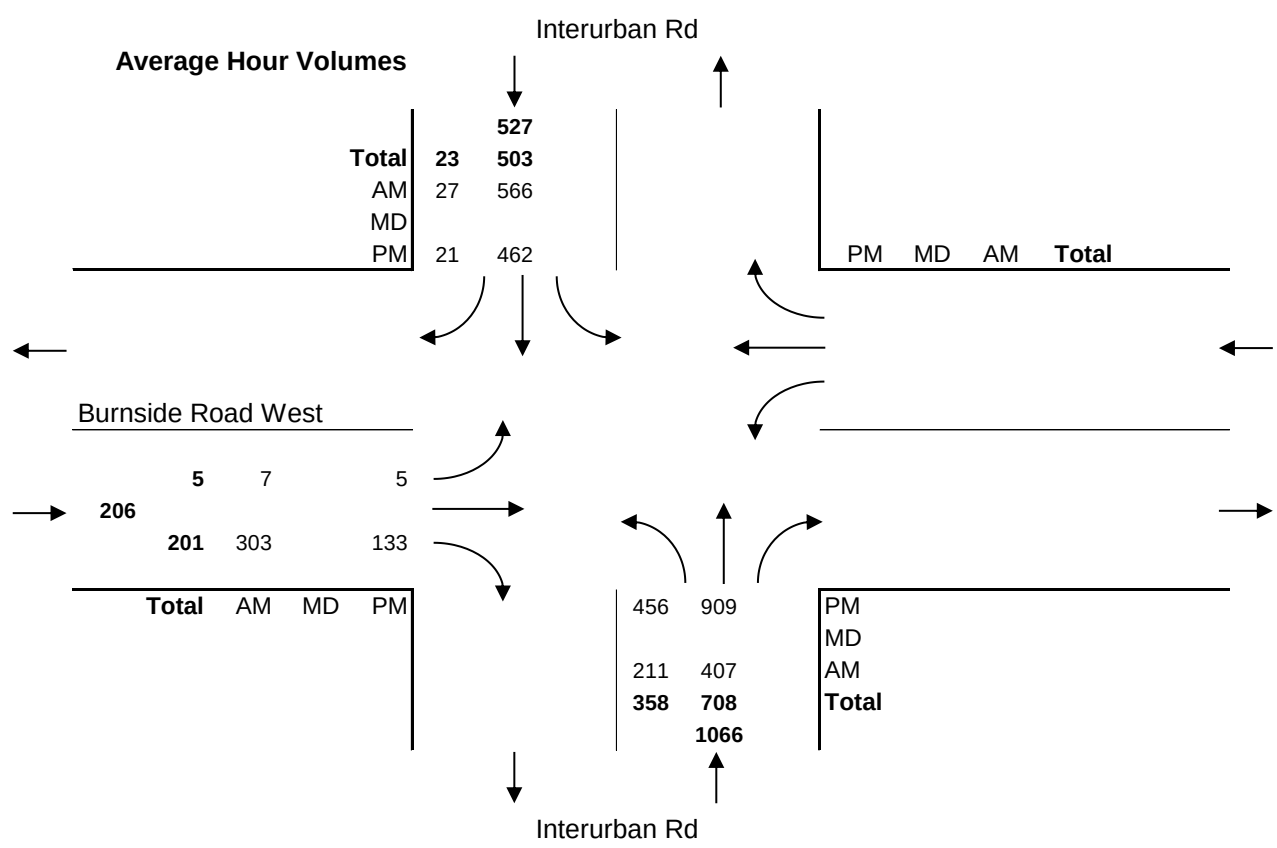

Vehicle Turning Movement Survey
With Classification

Major Route: Burnside Road West
Minor Route: Interurban Road
Municipality: Saanich
Filename: Burnside Road West @ Interurban Rd-Oct 23, 2019.xlsx
Location #: TIN001161
Count ID: 2019028
Date: October 23, 2019
Day-of-week: Wednesday

East/West Route: Burnside Road West
Intersection Type: 4-leg
Signalized?: No
Weather: Overcast and dry

Vehicle Classifications: Vehicles and Peds
Bikes

This data is for Bikes

Shift	Start	End	Duration
AM	7:30	9:30	2.00
MD			
PM	15:30	18:30	3.00
Total	**7:30**	**18:30**	**5.00**

Notes: 24-hour clock used for reporting (15-minute increments)
North Approach - southbound vehicles approaching intersection from the north
15x4 - 15 min volume (from maximum 15 minute period of movement/approach in peak hour period [*]) x 4
Pedestrians - N indicates pedestrians crossing north approach (east/west)

Comments:

Survey Data
Bikes

Burnside Road West @ Interurban Road
Wednesday, October 23, 2019

Time Period Begins	Interurban Rd NORTH Approach				Interurban Rd SOUTH Approach				Burnside Road West WEST Approach				EAST Approach				Total Volume		Peak				
	Left	Thru	Right	Total	Left	Thru	Right	Total	Left	Thru	Right	Total	Left	Thru	Right	Total	15-min	Hour		N	S	W	E
7:30	0	1	0	**1**	1	0	0	**1**	0	0	0	**0**	0	0	9	**9**	**11**		*	0	0	0	0
7:45	9	2	0	**11**	0	3	0	**3**	0	0	0	**0**	0	0	11	**11**	**25**		+	0	0	0	0
8:00	5	0	0	**5**	0	4	0	**4**	0	0	0	**0**	0	0	5	**5**	**14**		*	0	0	0	0
8:15	5	0	0	**5**	0	1	0	**1**	0	0	1	**1**	0	0	4	**4**	**11**	61	*	0	0	0	0
8:30	1	1	0	**2**	0	0	0	**0**	0	0	0	**0**	0	0	3	**3**	**5**	55		0	0	0	0
8:45	3	1	1	**5**	0	2	0	**2**	0	0	0	**0**	0	0	0	**0**	**7**	37		0	0	0	0
9:00	1	0	0	**1**	0	1	0	**1**	7	0	0	**7**	0	0	4	**4**	**13**	36		0	0	0	0
9:15	3	1	0	**4**	0	0	0	**0**	0	0	0	**0**	0	0	5	**5**	**9**	34		0	0	0	0
n/a																							
n/a																							
n/a																							
n/a																							
n/a																							
n/a																							
n/a																							
n/a																							
n/a																							
n/a																							
n/a																							
Total	27	6	1	**34**	1	11	0	**12**	7	0	1	**8**	0	0	41	**41**	**95**			0	0	0	0
n/a																							
n/a																							
n/a																							
n/a																							
n/a																							
n/a																							
n/a																							
n/a																							
n/a																							
n/a																							
n/a																							
n/a																							
n/a																							
n/a																							
n/a																							
n/a																							
n/a																							
n/a																							
n/a																							
n/a																							
n/a																							
n/a																							
n/a																							
n/a																							
n/a																							
n/a																							
n/a																							
n/a																							
n/a																							
n/a																							
n/a																							
n/a																							
n/a																							
n/a																							
n/a																							
n/a																							
n/a																							
Total																							
15:30	5	2	0	**7**	0	0	0	**0**	0	0	0	**0**	0	0	2	**2**	**9**			0	0	0	0
15:45	4	5	0	**9**	0	0	0	**0**	0	0	0	**0**	0	0	3	**3**	**12**			0	0	0	0
16:00	3	1	0	**4**	0	0	1	**1**	0	0	0	**0**	0	0	3	**3**	**8**			0	0	0	0
16:15	5	1	2	**8**	0	0	0	**0**	0	0	0	**0**	0	0	9	**9**	**17**	46	*	0	0	0	0
16:30	8	2	0	**10**	0	0	0	**0**	0	0	2	**2**	0	0	11	**11**	**23**	60	+	0	0	0	0
16:45	2	4	1	**7**	0	2	0	**2**	0	0	0	**0**	0	0	9	**9**	**18**	66	*	0	0	0	0
17:00	3	3	1	**7**	0	0	0	**0**	0	0	1	**1**	0	0	13	**13**	**21**	79	*	0	0	0	0
17:15	5	4	1	**10**	0	0	0	**0**	0	0	0	**0**	0	0	3	**3**	**13**	75		0	0	0	0
17:30	6	2	1	**9**	0	3	0	**3**	0	0	0	**0**	0	0	6	**6**	**18**	70		0	0	0	0
17:45	4	2	0	**6**	0	2	0	**2**	0	0	0	**0**	0	0	5	**5**	**13**	65		0	0	0	0
18:00	0	0	0	**0**	0	1	0	**1**	0	0	0	**0**	0	0	2	**2**	**3**	47		0	0	0	0
18:15	1	2	0	**3**	0	0	0	**0**	0	0	0	**0**	0	0	1	**1**	**4**	38		0	0	0	0
n/a																							
n/a																							
n/a																							
n/a																							
n/a																							
n/a																							
n/a																							
n/a																							
Total	46	28	6	**80**	0	8	1	**9**	0	0	3	**3**	0	0	67	**67**	**159**			0	0	0	0

AM Peak Period
Bikes

Burnside Road West @ Interurban Road
Wednesday, October 23, 2019

Time Period Begins	Interurban Rd NORTH Approach				Interurban Rd SOUTH Approach				Burnside Road West WEST Approach				EAST Approach				Total Volume		Peak					Conflict	
	Left	Thru	Right	Total	Left	Thru	Right	Total	Left	Thru	Right	Total	Left	Thru	Right	Total	15-min	Hour		N	S	W	E	15 min	Hr
7:30	0	1	0	1	1	0	0	1	0	0	0	0	0	0	9	9	11		*	0	0	0	0	11	
7:45	9	2	0	11	0	3	0	3	0	0	0	0	0	0	11	11	25		+	0	0	0	0	23	
8:00	5	0	0	5	0	4	0	4	0	0	0	0	0	0	5	5	14		*	0	0	0	0	14	
8:15	5	0	0	5	0	1	0	1	0	0	1	1	0	0	4	4	11	61	*	0	0	0	0	10	58
8:30	1	1	0	2	0	0	0	0	0	0	0	0	0	0	3	3	5	55		0	0	0	0	4	51
8:45	3	1	1	5	0	2	0	2	0	0	0	0	0	0	0	0	7	37		0	0	0	0	5	33
9:00	1	0	0	1	0	1	0	1	7	0	0	7	0	0	4	4	13	36		0	0	0	0	13	32
9:15	3	1	0	4	0	0	0	0	0	0	0	0	0	0	5	5	9	34		0	0	0	0	8	30
n/a																									
n/a																									
n/a																									
n/a																									
n/a																									
n/a																									
n/a																									
n/a																									
n/a																									
n/a																									
n/a																									
Total	27	6	1	**34**	1	11	0	**12**	7	0	1	**8**	0	0	41	**41**	95			0	0	0	0		86
Avg Hr	14	3	1	**17**	1	6	0	**6**	4	0	1	**4**	0	0	21	**21**	48			0	0	0	0		

Peak hour of the intersection

Pk Hr	19	3	0	22	1	8	0	9	0	0	1	1	0	0	29	29	61	*		0	0	0	0		56
15x4	36	8	0	44	4	16	0	16	0	0	4	4	0	0	44	44	100	+		0	0	0	0		96
PHF	0.53	0.38	n/a	**0.50**	0.25	0.50	n/a	**0.56**	n/a	n/a	0.25	**0.25**	n/a	n/a	0.66	**0.66**	0.61			n/a	n/a	n/a	n/a		0.58

Peak hour of conflicting volumes for the intersection

Pk Hr	19	3	0	22	1	8	0	9	0	0	1	1	0	0	29	29	61	*		0	0	0	0		56
15x4	36	8	0	44	4	16	0	16	0	0	4	4	0	0	44	44	100	+		0	0	0	0		96
PHF	0.53	0.38	n/a	**0.50**	0.25	0.50	n/a	**0.56**	n/a	n/a	0.25	**0.25**	n/a	n/a	0.66	**0.66**	0.61			n/a	n/a	n/a	n/a		0.58

** Calculated peak hour occurs during the first or last hour of shift and therefore may be invalid. **

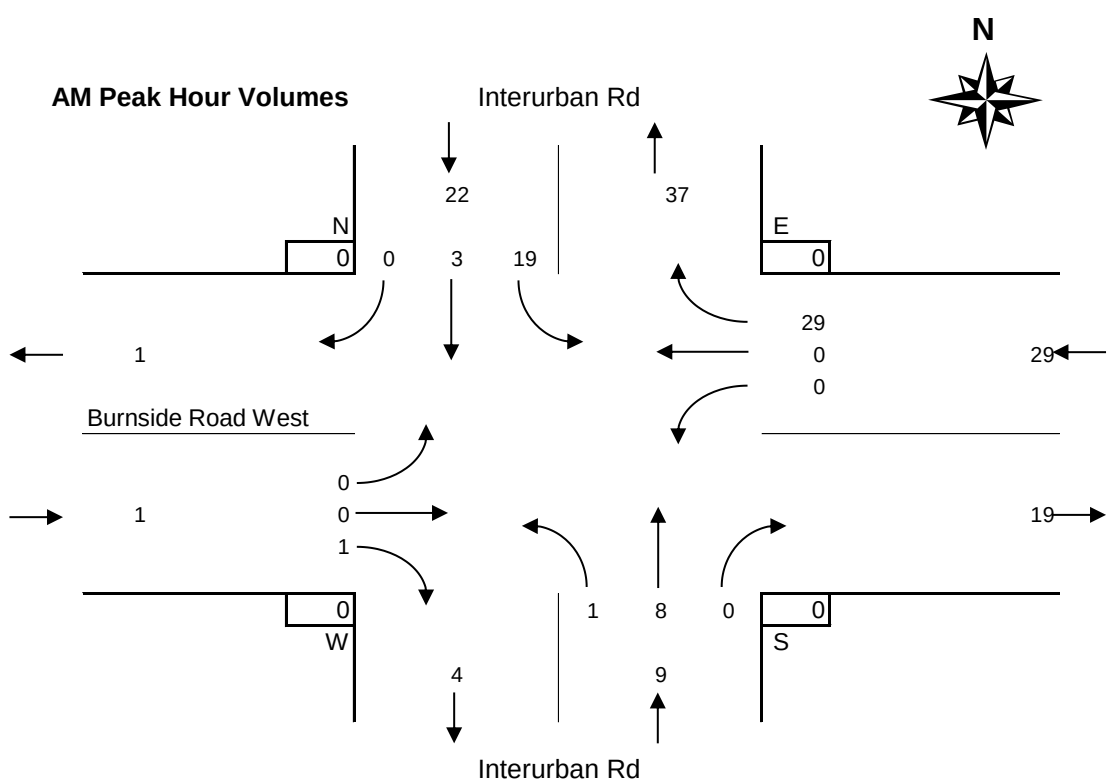

MD Peak Period
Bikes

Burnside Road West @ Interurban Road
Wednesday, October 23, 2019

Time Period Begins	Interurban Rd NORTH Approach				Interurban Rd SOUTH Approach				Burnside Road West WEST Approach				EAST Approach				Total Volume		Peak					Conflict	
	Left	Thru	Right	Total	Left	Thru	Right	Total	Left	Thru	Right	Total	Left	Thru	Right	Total	15-min	Hour		N	S	W	E	15 min	Hr
n/a																									
n/a																									
n/a																									
n/a																									
n/a																									
n/a																									
n/a																									
n/a																									
n/a																									
n/a																									
n/a																									
n/a																									
n/a																									
n/a																									
n/a																									
n/a																									
Total																									
Avg Hr																									

Peak hour of the intersection

Pk Hr																		*							
15x4																		+							
PHF																									

Peak hour of conflicting volumes for the intersection

Pk Hr																		*							
15x4																		+							
PHF																									

MD Peak Hour Volumes

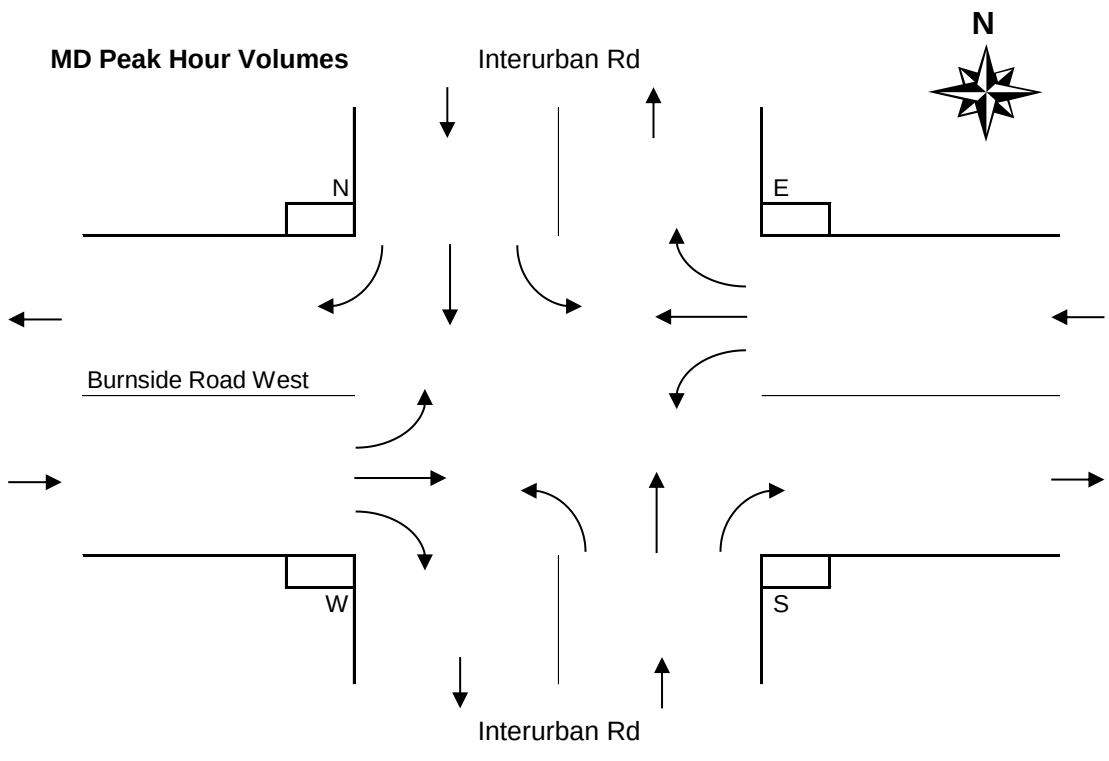

PM Peak Period
Bikes

Burnside Road West @ Interurban Road
Wednesday, October 23, 2019

Time Period Begins	Interurban Rd NORTH Approach Left	Thru	Right	Total	Interurban Rd SOUTH Approach Left	Thru	Right	Total	Burnside Road West WEST Approach Left	Thru	Right	Total	EAST Approach Left	Thru	Right	Total	Total Volume 15-min	Hour	Peak	N	S	W	E	Conflict 15 min	Hr
15:30	5	2	0	7	0	0	0	0	0	0	0	0	0	0	2	2	9			0	0	0	0	7	
15:45	4	5	0	9	0	0	0	0	0	0	0	0	0	0	3	3	12			0	0	0	0	8	
16:00	3	1	0	4	0	0	1	1	0	0	0	0	0	0	3	3	8			0	0	0	0	7	
16:15	5	1	2	8	0	0	0	0	0	0	0	0	0	0	9	9	17	46	*	0	0	0	0	14	36
16:30	8	2	0	10	0	0	0	0	0	0	2	2	0	0	11	11	23	60	+	0	0	0	0	19	48
16:45	2	4	1	7	0	2	0	2	0	0	0	0	0	0	9	9	18	66	*	0	0	0	0	14	54
17:00	3	3	1	7	0	0	0	0	0	0	1	1	0	0	13	13	21	79	*	0	0	0	0	17	64
17:15	5	4	1	10	0	0	0	0	0	0	0	0	0	0	3	3	13	75		0	0	0	0	8	58
17:30	6	2	1	9	0	3	0	3	0	0	0	0	0	0	6	6	18	70		0	0	0	0	15	54
17:45	4	2	0	6	0	2	0	2	0	0	0	0	0	0	5	5	13	65		0	0	0	0	11	51
18:00	0	0	0	0	0	1	0	1	0	0	0	0	0	0	2	2	3	47		0	0	0	0	3	37
18:15	1	2	0	3	0	0	0	0	0	0	0	0	0	0	1	1	4	38		0	0	0	0	3	32
n/a																									
n/a																									
n/a																									
n/a																									
n/a																									
n/a																									
n/a																									
n/a																									
Total	46	28	6	**80**	0	8	1	**9**	0	0	3	**3**	0	0	67	**67**	159			0	0	0	0		122
Avg Hr	15	9	2	**27**	0	3	0	**3**	0	0	1	**1**	0	0	22	**22**	53			0	0	0	0		

Peak hour of the intersection

Pk Hr	18	10	4	32	0	2	0	2	0	0	3	3	0	0	42	42	79	*		0	0	0	0		62
15x4	32	16	8	40	0	8	0	8	0	0	8	8	0	0	52	52	92	+		0	0	0	0		92
PHF	0.56	0.63	0.50	**0.80**	n/a	0.25	n/a	**0.25**	n/a	n/a	0.38	**0.38**	n/a	n/a	0.81	**0.81**	0.86			n/a	n/a	n/a	n/a		0.67

Peak hour of conflicting volumes for the intersection

Pk Hr	18	10	4	32	0	2	0	2	0	0	3	3	0	0	42	42	79	*		0	0	0	0		62
15x4	32	16	8	40	0	8	0	8	0	0	8	8	0	0	52	52	92	+		0	0	0	0		92
PHF	0.56	0.63	0.50	**0.80**	n/a	0.25	n/a	**0.25**	n/a	n/a	0.38	**0.38**	n/a	n/a	0.81	**0.81**	0.86			n/a	n/a	n/a	n/a		0.67

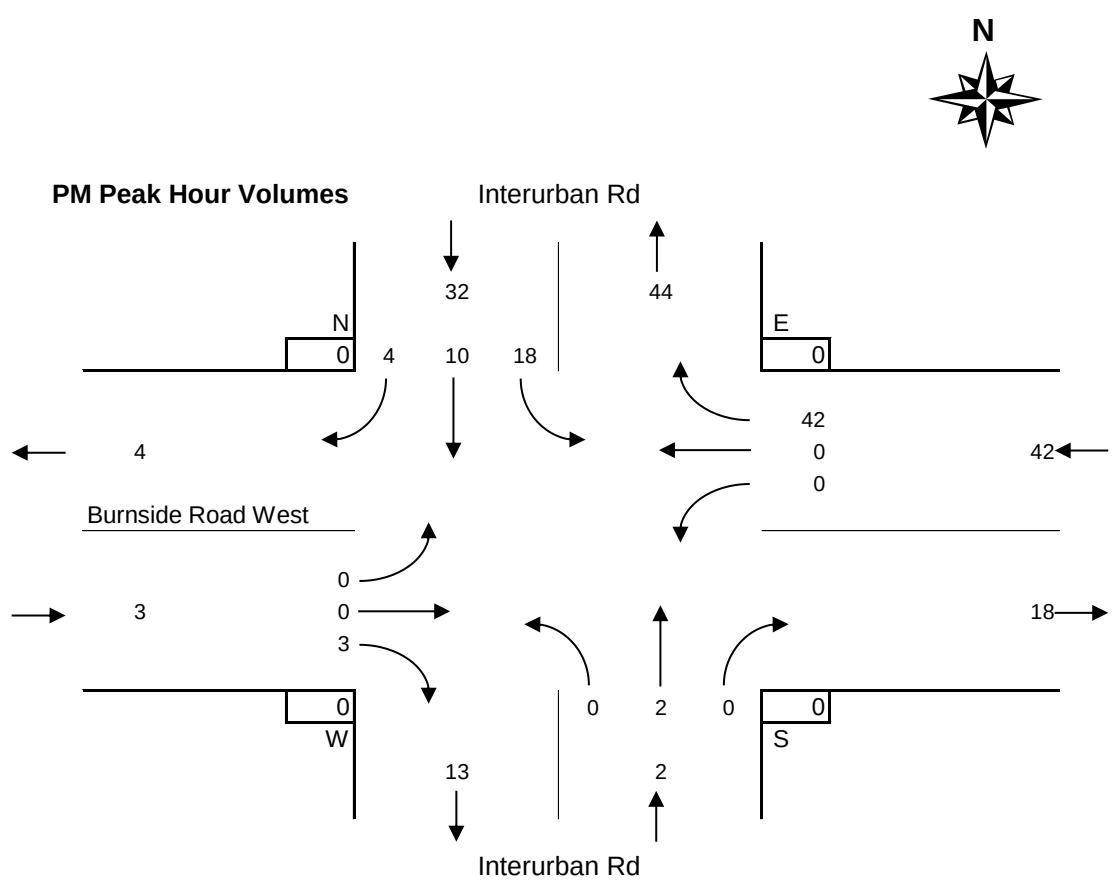

Period Hourly Averages
Bikes

Burnside Road West @ Interurban Road
Wednesday, October 23, 2019

Entire Survey Period
5 Hours

	Interurban Rd				Interurban Rd				Burnside Road West											
	NORTH Approach				SOUTH Approach				WEST Approach				EAST Approach				Total			
	Left	Thru	Right	Total	Left	Thru	Right	Total	Left	Thru	Right	Total	Left	Thru	Right	Total	Volume	N	S	W	E
Total	73	34	7	**114**	1	19	1	**21**	7	0	4	**11**	0	0	108	**108**	254	0	0	0	0
Avg Hr	15	7	1	**23**	0	4	0	**4**	1	0	1	**2**	0	0	22	**22**	51	0	0	0	0

AM Peak Period
2 Hours

	Interurban Rd				Interurban Rd				Burnside Road West											
	NORTH Approach				SOUTH Approach				WEST Approach				EAST Approach				Total			
Totals	Left	Thru	Right	Total	Left	Thru	Right	Total	Left	Thru	Right	Total	Left	Thru	Right	Total	Volume	N	S	W	E
Period	27	6	1	**34**	1	11	0	**12**	7	0	1	**8**	0	0	41	**41**	95	0	0	0	0
Avg Hr	14	3	1	**17**	1	6	0	**6**	4	0	1	**4**	0	0	21	**21**	48	0	0	0	0

MD Peak Period
Hours

	Interurban Rd				Interurban Rd				Burnside Road West											
	NORTH Approach				SOUTH Approach				WEST Approach				EAST Approach				Total			
Totals	Left	Thru	Right	Total	Left	Thru	Right	Total	Left	Thru	Right	Total	Left	Thru	Right	Total	Volume	N	S	W	E
Total																					
Avg Hr																					

PM Peak Period
3 Hours
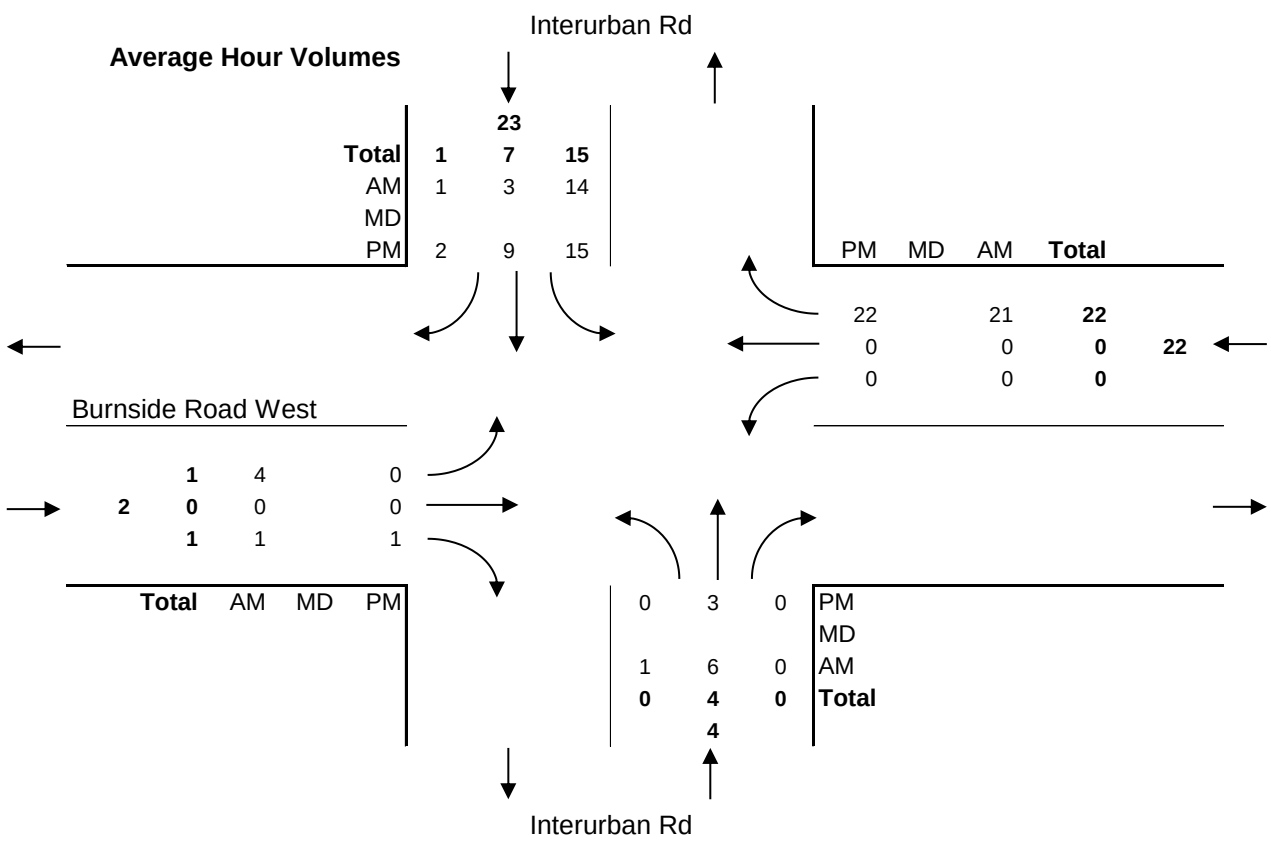
	Interurban Rd				Interurban Rd				Burnside Road West											
	NORTH Approach				SOUTH Approach				WEST Approach				EAST Approach				Total			
Totals	Left	Thru	Right	Total	Left	Thru	Right	Total	Left	Thru	Right	Total	Left	Thru	Right	Total	Volume	N	S	W	E
Total	46	28	6	**80**	0	8	1	**9**	0	0	3	**3**	0	0	67	**67**	159	0	0	0	0
Avg Hr	15	9	2	**27**	0	3	0	**3**	0	0	1	**1**	0	0	22	**22**	53	0	0	0	0